Armix Standart

Description : ARMIX STANDART Basin Mixer
Code No : 41302DSR Chrome
41302SAG Chrome
Cartridge : 35 mm High Pressure Ceramic Disc Cartridge
Spout Outlet : M 24X1 Aerator
Temperature : Max. 80°C
Information : Soft closing, quiet performance

1

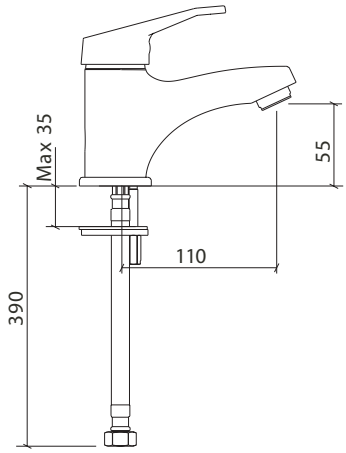

3

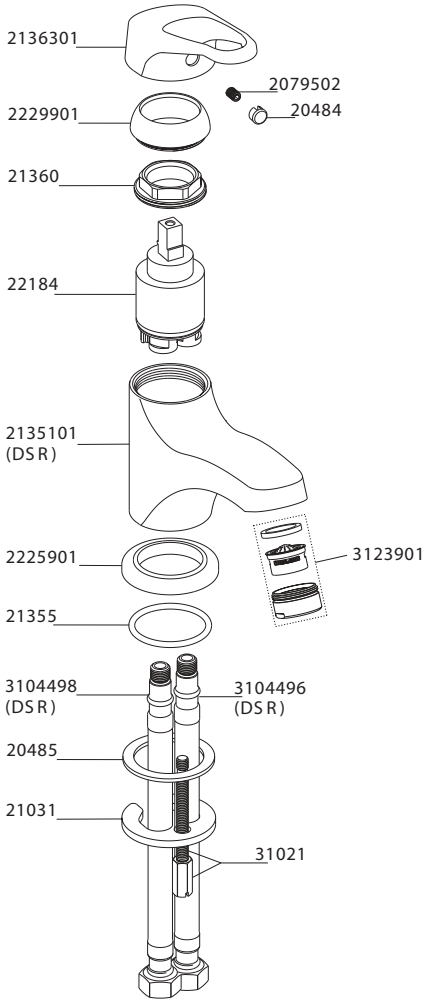

Part No	Part Name	Spare Part No
20484	Reference Seal	
20485	Seal	
21031	Body Fastening Plate	
21355	O-Ring	
21360	Cartridge Fastening Collar	
22184	Cartridge / 35 mm	
31021	Group Fastening Stud	
2079502	Screw	
2135101	Body (DSR)	
2136301	Armix Standart Control Lever	
2225901	Body Rosette	
2229901	Cartridge Cap	
3104496	Tube / L=400 mm (DSR)	

Part No	Part Name	Spare Part No
3104498	Tube / L=400 mm (DSR)	
3123901	Group Aerator / M24X1	

Part No	Part Name	Spare Part No

ARTEMA Sanitaryware, Tapware & Bathroom Accessories are imported and distributed by Arcorp Pty. Ltd.